KI077 Usage instruction

Massage bathtub series

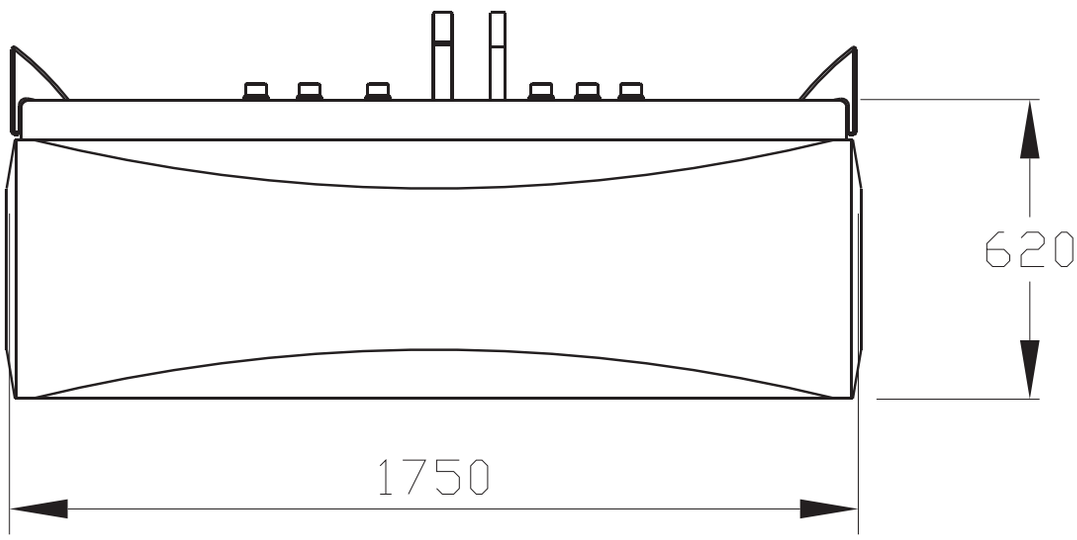

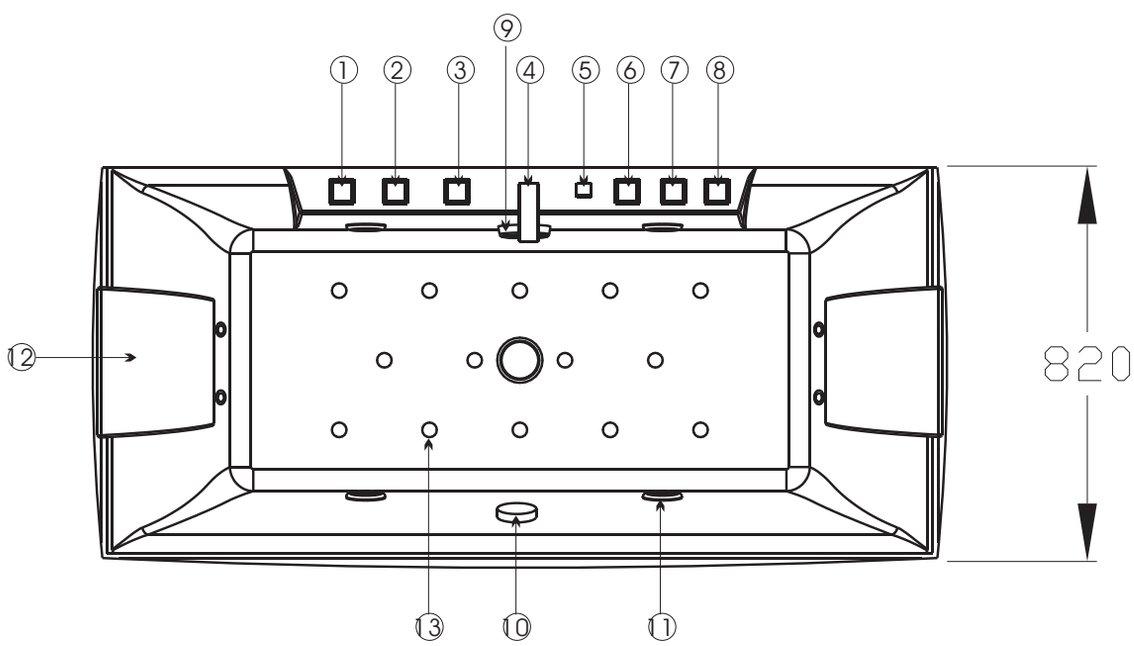

① Cool water on-off

② Faucet or shower adjustment

③ Cool water on-off

④ linn faucet

⑤ Shower

⑥ Water pump on-off

⑦ Air pump on-off

⑧ Adjustment of Surfing

⑨ Suction meatus of water

⑩ Water overflow

⑪ Massage jets

⑫ Pillow

⑬ Air bubble jets

Please read the booklet carefully before using.

1, Safety notice item:

- Cardiopathy, hypertension and person who is unwell or after drinking, please no not use the massage bathtub to avoid risk happening.
- Children should be accompanied by the adult while using the massage bathtub.
- Power plug must be assembled with creepage protector and connected with the terra wire, and follows the rules to operate. Power socket must be install out of reach of water.
- The massage bathtub must be assembled by the careerman.
- When switch on the shower and linn faucet, please adjust the suitable water temperature firstly, to avoid scalding and destroy the products.

2, Usage instruction:

- Switch on the linn faucet/shower switch valve, switch on the cool water adjusting valve firstly, then switch on the hot water adjusting valve, adjust the suitable water temperature and water massage bathtub(Forbid to water the temperature higher 80℃ hot water directly, or it will destroy the product), press the air switch to make the air pump running, but must await the water line reach 2CM above jets, then press the air switch to switch on the water pump (forbid to make the water pump running for a long timewithout water, or the water pump will destroy because of too high temperature), left-right surf adjuster can adjust the size of current; turn the jets to adjust single jet's current size to get the best massage impact.

- Finish using, eliminate the water in massage bathtub, then water suitable clear water.
- If you will not use the massage bathtub for a long time, please shut off the source and power of massage bathtub.

3, Way of installation.

- Level the ground and wall corner, connect cool & hot water hose correctly, assemble power socket and reference the size's parameter to prepare the drain outlet .

- Place the massage bathtub in the confirmed position, adjust all the underprop to make them meeting the ground and levelling.

- Immit a spot of water in massage bathtub, turning the drainer handle, await finishing draining, there is not any water in the massage bathtub more, or should repeat the step 2, until there is no water in bathtub.

- Connect the cool & hot water pipe correctly, insert the draining hose into the drainer, insert the power socket correctly.
- Place the massage bathtub in the position appressed to the wall. Seal the connective parts by silicone building sealant.
- Adjust all the function with water to check if all function are Ok

4, Maintenance and maintain

- Daily cleaning with general liquid scour, please do not clean the bathtub with doughty acid, doughty alkali, latex , acetone and the chemical which containing methacrylic, formaldehyde, or it will make the bathtub face paled, or destroy the bathtub.
- Polish the face scar with 1000# levigation sand paper firstly, then polish with 1500# sand paper, polishing with soft cloth and toothpaste at last.
- Clean away the scale on the bathtub face with citric acid or vinegar.
- Scrape the stubborn blotch with sort cloth and toothpaste.
- After using for a long time, you can renew the bathtub with luster wax, it will make the product look likes a new one.

5, Currently fault analyze

Fault phenomena	Fault analyzing	Fault obviating
Water/air pump can not be start up	1. the air hose which connected with the air pump switch was loosened.	Connect anew correctly.
	2.air pump switch was broken.	change
	3.power plug haven't been inserted correctly or power fault.	Obviate the supply of power fault.
	4.the water pump's impeller was locked by some sundries.	Take down the water recycle net and `clean away the sundries.
	5. the water pump was broken.	Change a new water pump.
surfing can not adjust	1. Surfing adjustor was broken.	Change the sealed gasket inside the adjustor.
	2.The air hose of surfing adjustor loosen,leak air or jam.	Dredge and connect anew correctly.
make water	1. sealed washer aging and broken.	Change
	2.locked nut loosened.	Belock anew.
	3.connecting parts' latex aging.	Clean way the old latex and connect with new latex.
Shake acutely	1.grounded parts of bathtub hang in the air.	Adjusting all grounded parts and make them grounded correctly.
	2.water inlet jaming	ake down the water recycle net and clean away the sundries .
Water pump works but the bottom]light is not light	1.bathtub bottom light short circuit	Obviating the circuitry fault
	2. bathtub bottom light is broken	Change the bathtub bottom light (forbid increasing power)
	3.transformer is broken.	Change the transformer(forbid minishing the rated power.)

Controlling valve connecting illustration

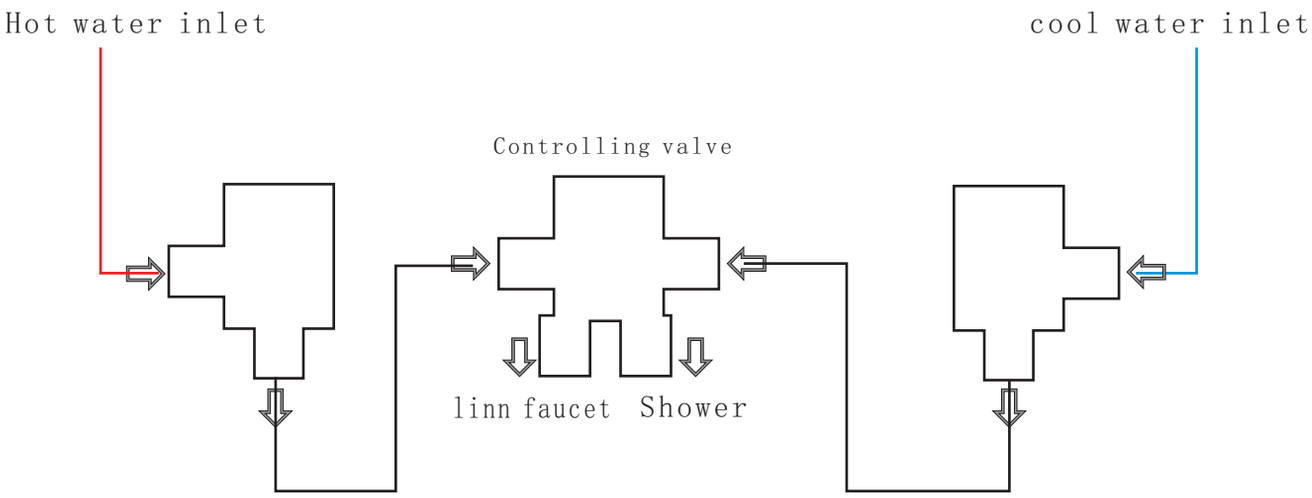

Electric blueprint:

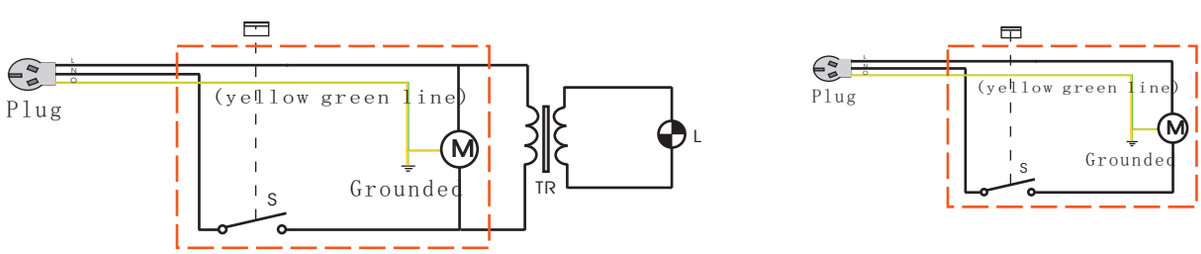

Water power　　Air power

Notice: Must advertence the nameplate before connect the power

S -----air switch　　M-----water/air pump motor
TR-----transformer(20-60w 220/12v)　　L-----bathtub bottom light(20w/12v)
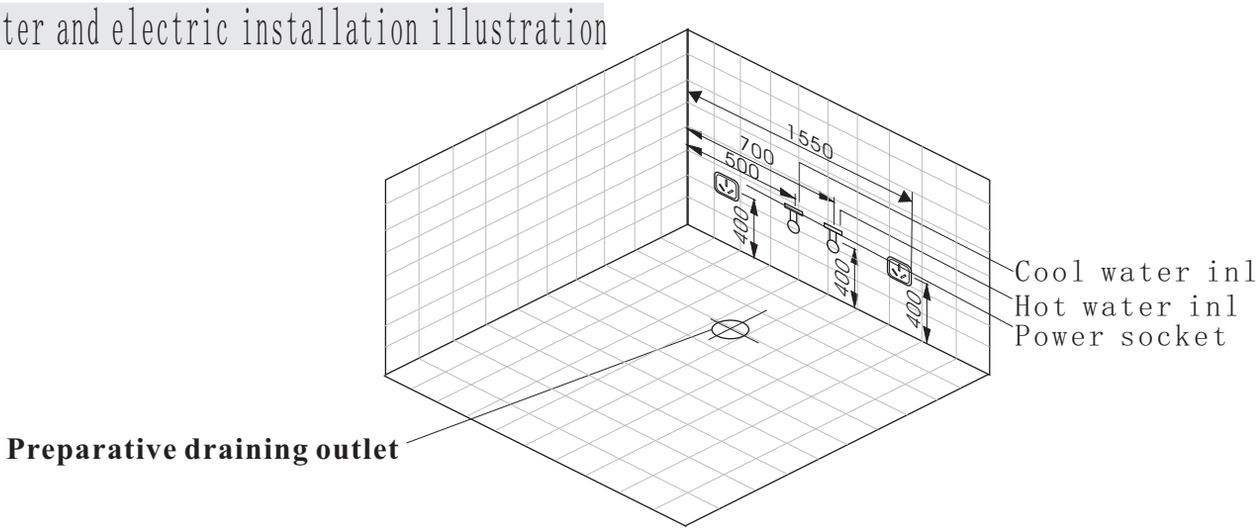
Water and electric installation illustration